BCM® in a VIA™ Package Bus Converter

BCM4414xH0E5035yzz

Isolated Fixed-Ratio DC-DC Converter

Features & Benefits

- Up to 35A continuous low-voltage-side current
- Fixed transformation ratio (K) of 1/16
- Up to 776W/in^3 power density
- 97.7% peak efficiency
- Integrated filtering
- Parallel operation for multi-kW arrays
- OV, OC, UV, short circuit and thermal protection
- 4414 package
- High MTBF
- Thermally enhanced VIA package
- PMBus® management interface

Typical Applications

- High-Voltage DC Power Distribution
- 3-Phase AC-DC Converters
- Information and Communication Technology (ICT) Equipment
- High-End Computing Systems
- Automated Test Equipment
- Industrial Systems
- High-Density Energy Systems
- Transportation
- Green Buildings and Microgrids

Product Ratings	
V_{HI} = 650V (500 – 800V)	I_{LO} = up to 35A
V_{LO} = 40.6V (31.3 – 50.0V) (NO LOAD)	K = 1/16

Product Description

The BCM4414xH0E5035yzz in a VIA package is a high-efficiency Bus Converter, operating from a 500 to 800V_{DC} high-voltage bus to deliver an isolated 31.3 to 50.0V_{DC} unregulated, low voltage.

This unique ultra-low-profile module incorporates DC-DC conversion, integrated filtering and PMBus commands and controls in a chassis or PCB mount form factor.

The BCM offers low noise, fast transient response and industry-leading efficiency and power density. A low-voltage-side referenced PMBus-compatible telemetry and control interface provides access to the BCM's configuration, fault monitoring and other telemetry functions.

Leveraging the thermal and density benefits of Vicor VIA packaging technology, the BCM module offers flexible thermal management options with very low top- and bottom-side thermal impedances.

When combined with downstream Vicor DC-DC conversion components and regulators, the BCM allows the Power Design Engineer to employ a simple, low-profile design, which will differentiate the end system without compromising on cost or performance metrics.

Size:
4.35 x 1.40 x 0.37in
[110.55 x 35.54 x 9.40mm]

Read Block protocol:

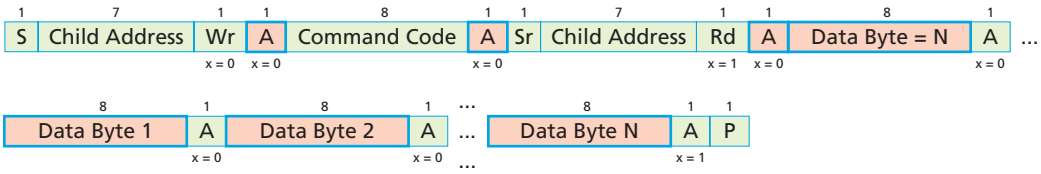

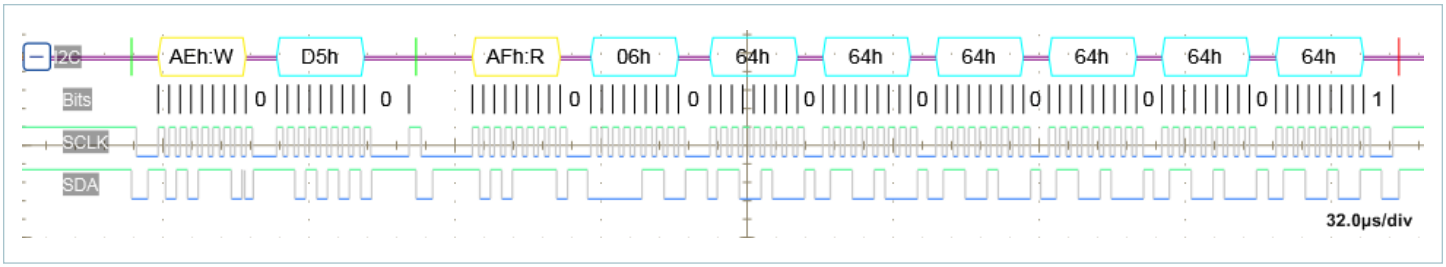

Figure 6 — *SET_ALL_THRESHOLDS COMMAND (D5h)_READ BLOCK PROTOCOL*

Write Group Command protocol:

Note that only one command per device is allowed in a group command.

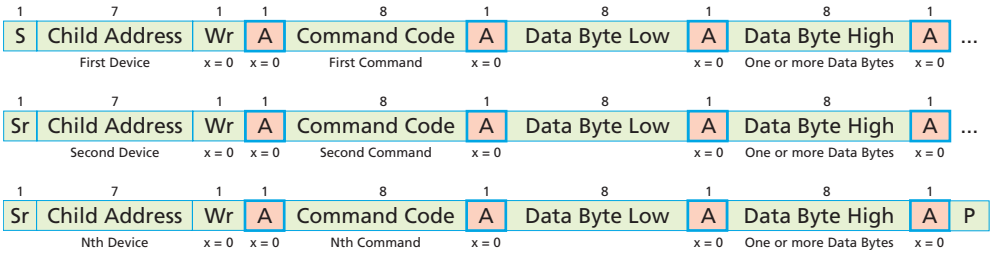

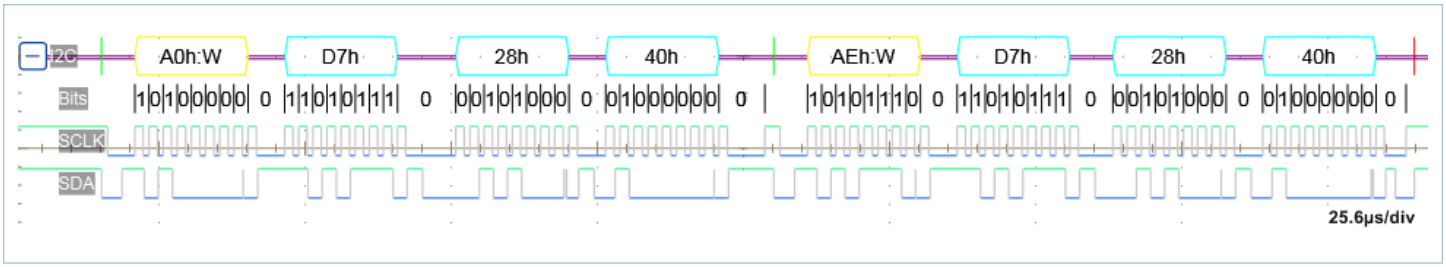

Figure 7 — *DISABLE_FAULT COMMAND (D7h)_WRITE*

Supported Commands Transaction Type

A direct communication to the BCM controller and a simulated communication to non-PMBus® devices is enabled by a page command. Supported command access privileges with a pre-selected PAGE are defined in the following table. Deviation from this table generates a communication error in STATUS_CML register.

Command	Code	PAGE Data Byte Access Type	
		00h	01h
PAGE	00h	R/W	R/W
OPERATION	01h	R	R/W
CLEAR_FAULTS	03h	W	W
CAPABILITY	19h	R	
OT_FAULT_LIMIT	4Fh		R/W
OT_WARN_LIMIT	51h		R/W
VIN_OV_FAULT_LIMIT	55h		R/W
VIN_OV_WARN_LIMIT	57h		R/W
IIN_OC_FAULT_LIMIT	5Bh		R/W
IIN_OC_WARN_LIMIT	5Dh		R/W
TON_DELAY	60h		R/W
STATUS_BYTE	78h	R/W	R
STATUS_WORD	79h	R	R
STATUS_IOUT	7Bh	R	R/W
STATUS_INPUT	7Ch	R	R/W
STATUS_TEMPERATURE	7Dh	R	R/W
STATUS_CML	7Eh	R/W	
STATUS_MFR_SPECIFIC	80h	R	R/W
READ_VIN	88h		R
READ_IIN	89h	R	R
READ_VOUT	8Bh		R
READ_IOUT	8Ch	R	R
READ_TEMPERATURE_1	8Dh	R	R
READ_POUT	96h	R	R
PMBUS_REVISION	98h	R	
MFR_ID	99h	R	
MFR_MODEL	9Ah	R	R
MFR_REVISION	9Bh	R	R
MFR_LOCATION	9Ch	R	R
MFR_DATE	9Dh	R	R
MFR_SERIAL	9Eh	R	R
MFR_VIN_MIN	A0h	R	R
MFR_VIN_MAX	A1h	R	R
MFR_VOUT_MIN	A4h	R	R
MFR_VOUT_MAX	A5h	R	R
MFR_IOUT_MAX	A6h	R	R
MFR_POUT_MAX	A7h	R	R
READ_K_FACTOR	D1h		R
READ_BCM_ROUT	D4h		R
SET_ALL_THRESHOLDS	D5h		R/W
DISABLE_FAULT	D7h		R/W

Page Command (00h)

The page command data byte of 00h prior to a command call will address the BCM controller specific data and a page data byte of 01h would broadcast to the BCM. The value of the Data Byte corresponds to the pin name trailing number with the exception of 00h and FFh.

Data Byte	Description
00h	BCM controller
01h	BCM

OPERATION Command (01h)

The OPERATION command can be used to turn on and off the connected BCM.

If synchronous start up is required in the system, it is recommended to use the command from host PMBus in order to achieve simultaneous array start up.

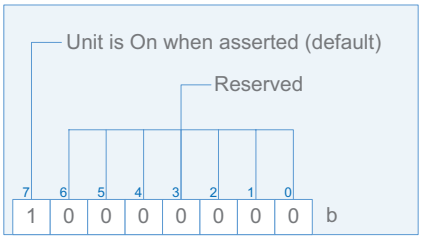

This command accepts only two data values: 00h and 80h. If any other value is sent the command will be rejected and a CML Data error will result.

CLEAR_FAULTS Command (03h)

This command clears all status bits that have been previously set. Persistent or active faults are re-asserted again once cleared. All faults are latched once asserted in the BCM controller. Registered faults will not be cleared when shutting down the BCM powertrain by recycling the BCM high-side voltage or sending the OPERATION command.

CAPABILITY Command (19h)

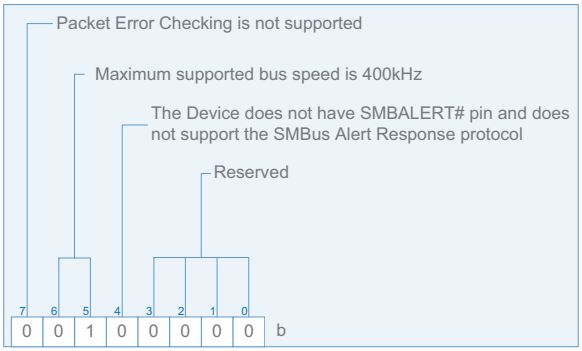

The BCM controller returns a default value of 20h. This value indicates that the PMBus® frequency supported is up to 400kHz and that both Packet Error Checking (PEC) and SMBALERT# are not supported.

OT_FAULT_LIMIT Command (4Fh), OT_WARN_ LIMIT Command (51h), VIN_OV_FAULT_ LIMIT Command (55h), VIN_OV_WARN_ LIMIT Command (57h), IIN_OC_FAULT_ LIMIT Command (5Bh), IIN_OC_WARN_ LIMIT Command (5Dh)

The values of these registers are set in non-volatile memory and can only be written when the BCM is disabled.

The values of the above mentioned faults and warnings are set by default to 100% of the respective BCM model supervisory limits. However, these limits can be set to a lower value. For example: In order for a limit percentage to be set to 80%, one would send a write command with a (50h) Data Word.

Any values outside the range of (00h – 64h) sent by a host will be rejected, will not override the currently stored value and will set the Unsupported Data bit in STATUS_CML.

The SET_ALL_THRESHOLDS COMMAND (D5h) combines in one block overtemperature fault and warning limits, V_{HI} overvoltage fault and warning limits as well as I_{LO} overcurrent fault and warning limits. A delay prior to a read command of up to 200ms following a write of new value is required.

The VIN_UV_WARN_LIMIT (58h) and VIN_UV_FAULT_LIMIT (59h) are set by the factory and cannot be changed by the host. However, a host can disable the undervoltage setting using the DISABLE_FAULT COMMAND (D7h).

All FAULT_RESPONSE commands are unsupported. The BCM powertrain supervisory limits and powertrain protection will behave as described in the Electrical Specifications. In general, once a fault is detected, the BCM powertrain will shut down and attempt to auto-restart after a predetermined delay.

TON_DELAY Command (60h)

The value of this register word is set in non-volatile memory and can only be written when the BCM is disabled.

The maximum possible delay is 100ms. Default value is set to (00h). The reported value can be interpreted using the following equation.

$$TON\_DELAY_{ACTUAL} = t_{REPORTED} \bullet 10^{-3}(s)$$

Staggering start up in an array is possible with the TON_DELAY Command. This delay will be in addition to any start up delay inherent in the BCM module. For example: start up delay from application of V_{HI} is typically 20ms. When TON_DELAY is greater than zero, the set delay will be added to it.

STATUS_BYTE (78h) and STATUS_WORD (79h)

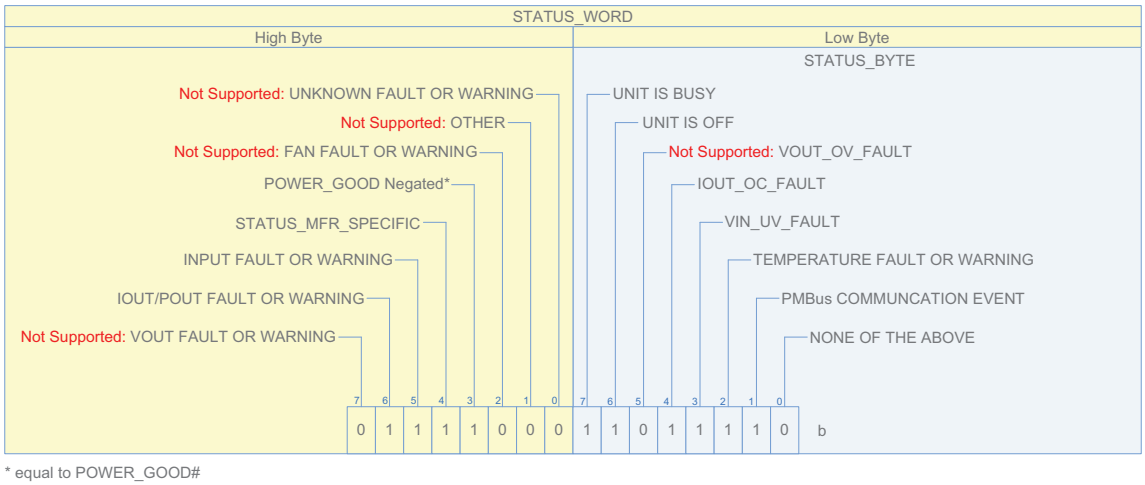

All fault or warning flags, if set, will remain asserted until cleared by the host or once the BCM and VDDB power is removed. This includes undervoltage fault, overvoltage fault, overvoltage warning, overcurrent warning, overtemperature fault, overtemperature warning, undertemperature fault, reverse operation, communication faults and analog controller shut-down fault.

Asserted status bits in all status registers, with the exception of STATUS_WORD and STATUS_BYTE, can be individually cleared. This is done by sending a data byte with one in the bit position corresponding to the intended warning or fault to be cleared. Refer to the PMBus® Power System Management Protocol Specification – Part II – Revision 1.2 for details.

The POWER_GOOD# bit reflects the state of the device and does not reflect the state of the POWER_GOOD# signal limits. The POWER_GOOD_ON COMMAND (5Eh) and POWER_GOOD_OFF COMMAND (5Fh) are not supported. The POWER_GOOD# bit is set, when the BCM is not in the active state, to indicate that the powertrain is inactive and not switching. The POWER_GOOD# bit is cleared, when the BCM is in the active state, 5ms after the powertrain is activated allowing for soft start to elapse. POWER_GOOD# and OFF bits cannot be cleared as they always reflect the current state of the device.

The Busy bit can be cleared using CLEAR_ALL Command (03h) or by writing either data value (40h, 80h) to PAGE (00h) using the STATUS_BYTE (78h).

Fault reporting, such as SMBALERT# signal output, and host notification by temporarily acquiring bus parent status is not supported.

If the BCM controller is powered through VDDB, it will retain the last telemetry data and this information will be available to the user via a PMBus Status request. This is in agreement with the PMBus standard, which requires that status bits remain set until specifically cleared. Note that in the case where the BCM V_{HI} is lost, the status will always indicate an undervoltage fault, in addition to any other fault that occurred.

NONE OF THE ABOVE bit will be asserted if either the STATUS_MFR_SPECIFIC (80h) or the High Byte of the STATUS WORD is set.

STATUS_IOUT (7Bh)

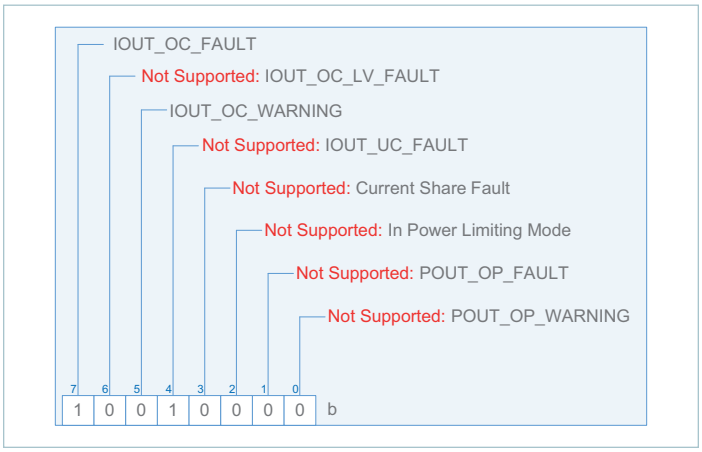

Unsupported bits are indicated above. A one indicates a fault.

STATUS_INPUT (7Ch)

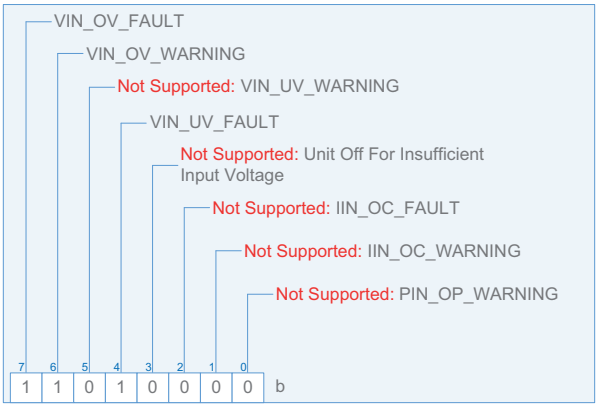

Unsupported bits are indicated above. A one indicates a fault.

STATUS_TEMPERATURE (7Dh)

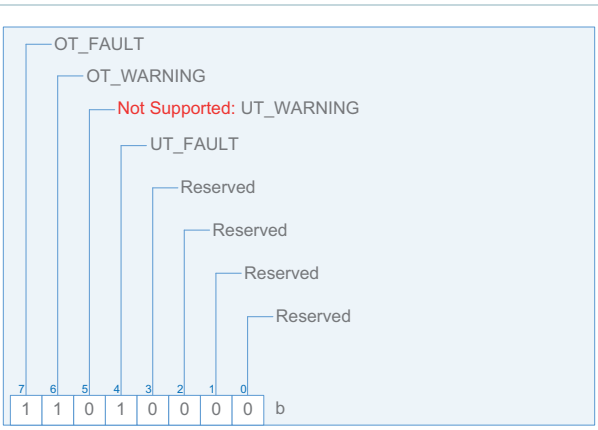

Unsupported bits are indicated above. A one indicates a fault.

STATUS_CML (7Eh)

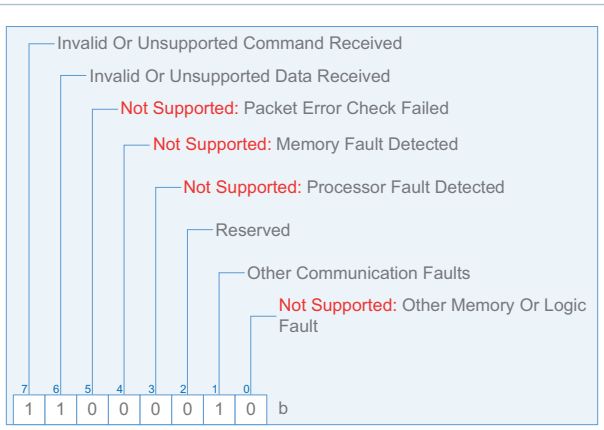

Unsupported bits are indicated above. A one indicates a fault. The STATUS_CML data byte will be asserted when an unsupported PMBus® command or data or other communication fault occurs.

STATUS_MFR_SPECIFIC (80h)

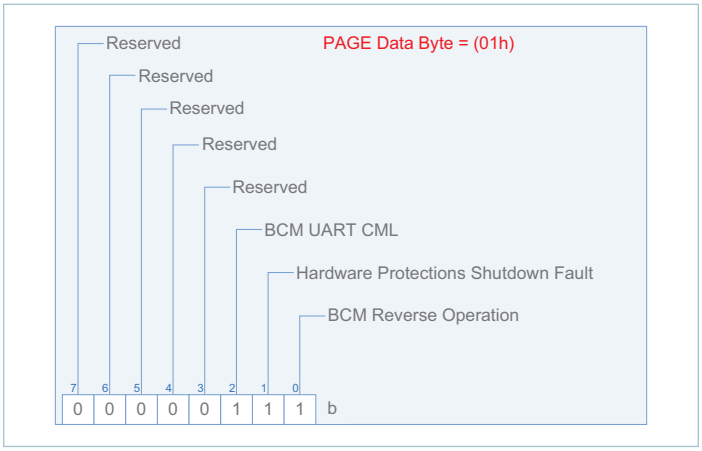

The reverse operation bit, if asserted, indicates that the BCM is processing current in reverse. Reverse current reported value is not supported.

The BCM has hardware protections and supervisory limits. The hardware protections provide an additional layer of protection and have the fastest response time. The Hardware Protections Shut-Down Fault, when asserted, indicates that at least one of the powertrain protection faults is triggered. This fault will also be asserted if a disabled fault event occurs after asserting any bit using the DISABLE_FAULTS COMMAND.

The BCM communicates with its internal secondary microcontroller via UART communication. If the BCM UART CML is asserted, it may indicate a hardware or connection issue between the BCM and the secondary microcontroller.

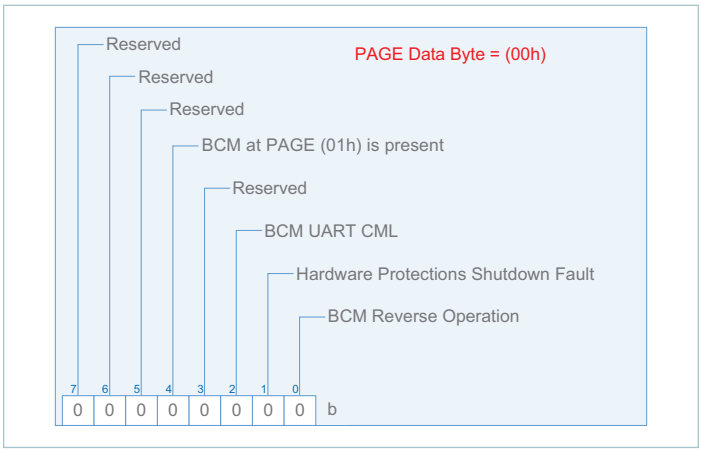

When the PAGE COMMAND (00h) data byte is equal to (00h), the BCM Reverse operation, Analog Controller Shut-Down Fault, and BCM UART CML bit will return the result of the active BCM. The BCM UART CML will also be asserted if the active BCM stops responding. The BCM must communicate at least once to the internal controller in order to trigger this FAULT. The BCM UART CML can be cleared using the PAGE (00h) CLEAR_FAULTS (03h) Command.

READ_VIN Command (88h)

If PAGE data byte is equal to (01h), command will return the BCM's HI-side voltage in the following format:

$$V_{HI\_ACTUAL} = V_{HI\_REPORTED} \bullet 10^{-1}(V)$$

READ_IIN Command (89h)

If PAGE data byte is equal to (01h), command will return the BCM's

$$I_{HI\_ACTUAL} = I_{HI\_REPORTED} \bullet 10^{-3}(A)$$

HI-side current in the following format:

If PAGE data byte is equal (00h), command will also return the BCM's HI-side current.

READ_VOUT Command (8Bh)

$$V_{LO\_ACTUAL} = V_{LO\_REPORTED} \bullet 10^{-1}(V)$$

If PAGE data byte is equal to (01h), command will return the BCM's LO-side voltage in the following format:

READ_IOUT Command (8Ch)

$$I_{LO\_ACTUAL} = I_{LO\_REPORTED} \bullet 10^{-2}(A)$$

If PAGE data byte is equal to (01h), command will return the BCM's LO-side current in the following format:

If PAGE data byte is equal (00h), command will also return the BCM's LO-side current.

READ_TEMPERATURE_1 Command (8Dh)

$$T_{ACTUAL} = \pm T_{REPORTED}\ (°C)$$

If PAGE data byte is equal to (01h), command will return the BCM's temperature in the following format:

If PAGE data byte is equal (00h), command will also return the BCM's temperature

READ_POUT Command (96h)

If PAGE data byte is equal to (01h), command will return the BCM's LO-side power in the following format:

$$P_{LO\_ACTUAL} = P_{LO\_REPORTED}\ (W)$$

If PAGE data byte is equal to (00h), command will also return the BCM's LO-side power.

MFR_VIN_MIN Command (A0h), MFR_VIN_MAX Command (A1h), MFR_VOUT_MIN Command (A4h), MFR_VOUT_MAX Command (A5h), MFR_IOUT_MAX Command (A6h), MFR_POUT_MAX Command (A7h)

These values are set by the factory and indicate the device HI-side/LO-side voltage and LO-side current range and LO-side power capacity.

If the PAGE data byte is equal to (00h – 01h),commands report the rated BCM HI-side voltage minimum and maximum in Volts, LO-side voltage minimum and maximum in Volts, LO-side current maximum in Amperes and LO-side power maximum in Watts.

READ_K_FACTOR Command (D1h)

If PAGE data byte is equal to (01h), command will return the BCM's K factor in the following format:

$$K\_FACTOR_{ACTUAL} = K\_FACTOR_{REPORTED} \bullet 2^{-16}(V/V)$$

The K factor is defined in the BCM to represent the ratio of the transformer winding and hence is equal to V_{LO} / V_{HI}.

READ_BCM_ROUT Command (D4h)

If PAGE data byte is equal to (01h), command will return the BCM's LO-side resistance in the following format:

$$BCM\_R_{LO\_ACTUAL} = BCM\_R_{LO\_REPORTED} \bullet 10^{-5}(\Omega)$$

SET_ALL_THRESHOLDS Command (D5h)

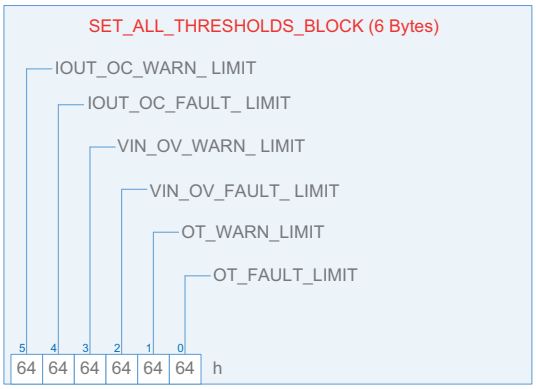

The values of this register block are set in non-volatile memory and can only be written when the BCM is disabled.

This command provides a convenient way to configure all of the limits, or any combination of limits described previously using one command.

V_{HI} overvoltage, overcurrent and overtemperature values are all set to 100% of the specified supervisory limits by default and can only be set to a lower percentage.

To leave a particular threshold unchanged, set the corresponding threshold data byte to a value greater than (64h).

DISABLE_FAULT Command (D7h)

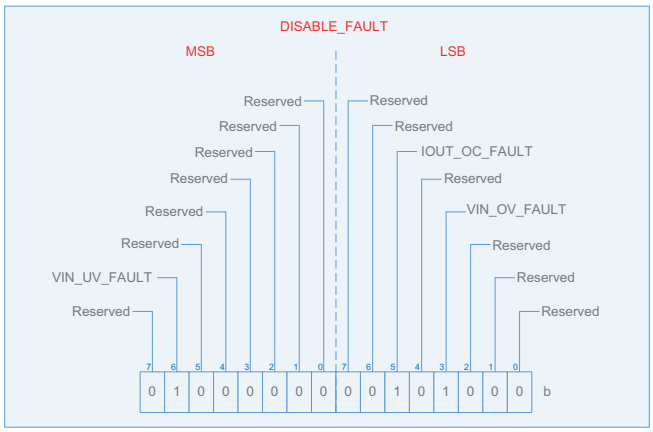

Unsupported bits are indicated above. A one indicates that the supervisory fault associated with the asserted bit is disabled.

The values of this register block are set in non-volatile memory and can only be written when the BCM is disabled.

This command allows the host to disable the supervisory faults and respective statuses. It does not disable the powertrain analog protections or warnings with respect to the set limits in the SET_ALL_THRESHOLDS Command.

The HI-side undervoltage can only be disabled to a pre-set low limit as specified in the Monitored Telemetry Functional Reporting Range.

The BCM Controller Implementation vs. PMBus® Specification Rev 1.2

The BCM controller is an I²C™ compliant, SMBus compatible device and PMBus command compliant device. This section denotes some deviation, perceived as differences from the PMBus Part I and Part II specification Rev 1.2.

1. The PMBus interface meets all Part I and II PMBus specification requirements with the following differences to the transport requirement.

Unmet DC parameter Implementation vs SMBus spec						
Symbol	Parameter	PMBus Interface		SMBus Rev 2.0		Units
		Min	Max	Min	Max	
V_{IL} [a]	Input Low Voltage	–	0.99	–	0.8	V
V_{IH} [a]	Input High Voltage	2.31	–	2.1	V_{VDD_IN}	V
I_{LEAK_PIN} [b]	Input Leakage per Pin	10	22	–	±5	µA

[a] V_{VDD_IN} = 3.3V
[b] V_{BUS} = 5V

2. The BCM accepts 38 PMBus command codes. Implemented commands execute functions as described in the PMBus specification.

- Deviations from the PMBus specification:

  a. Section 15, fault related commands

  - The limits and Warnings unit is implemented as a percentage (%) a range from decimal (0 – 100) of the factory set limits.

3. The unsupported PMBus command code response as described in the Fault Management and Reporting:

- Deviations from the PMBus specification:

  a. PMBus section 10.2.5.3, exceptions

  - The busy bit of the STATUS_BYTE as implemented can be cleared (80h). In order to maintain compatibility with the specification, (40h) can also be used.

- Manufacturer Implementation of the PMBus Spec:

  a. PMBus section 10.5, setting the response to a detected fault condition

  - All powertrain responses are pre-set and cannot be changed.

  b. PMBus section 10.6, reporting faults and warnings to the Host

  - SMBALERT# signal and Direct PMBus Device to Host Communication are not supported. However, the PMBus interface will set the corresponding fault status bits and will wait for the host to poll.

  c. PMBus section 10.7, clearing a shut down due to a fault

  - There is no RESET pin or EN pin in the BCM. Cycling power to the BCM will not clear a BCM Shut Down. The BCM will clear itself once the fault condition is removed.

  d. PMBus Section 10.8.1, corrupted data transmission faults:

  - Packet error checking is not supported.

Data Transmission Faults Implementation

This section describes data transmission faults as implemented in the BCM controller.

Section	Description	Response to Host		STATUS_BYTE	STATUS_CML		Notes
		NAK	FFh	CML	Other Fault	Unsupported Data	
10.8.1	Corrupted data						No response; PEC not supported
10.8.2	Sending too few bits			X	X		
10.8.3	Reading too few bits			X	X		
10.8.4	Host sends or reads too few bytes			X	X		
10.8.5	Host sends too many bytes	X		X		X	
10.8.6	Reading too many bytes		X	X	X		
10.8.7	Device busy	X	X				Device will ACK own address BUSY bit in STATUS_BYTE even if STATUS_WORD is set

Data Content Faults Implementation

This section describes data content fault as implemented in the BCM controller.

Section	Description	Response to Host	STATUS_BYTE	STATUS_CML			Notes
		NAK	CML	Other Fault	Unsupported Command	Unsupported Data	
10.9.1	Improperly set read bit in the address byte	X	X	X			
10.9.2	Unsupported command code	X	X		X		
10.9.3	Invalid or unsupported data		X			X	
10.9.4	Data out of range		X			X	
10.9.5	Reserved bits						No response; not a fault

BCM in VIA Package Chassis (Lug) Mount Package Mechanical Drawing

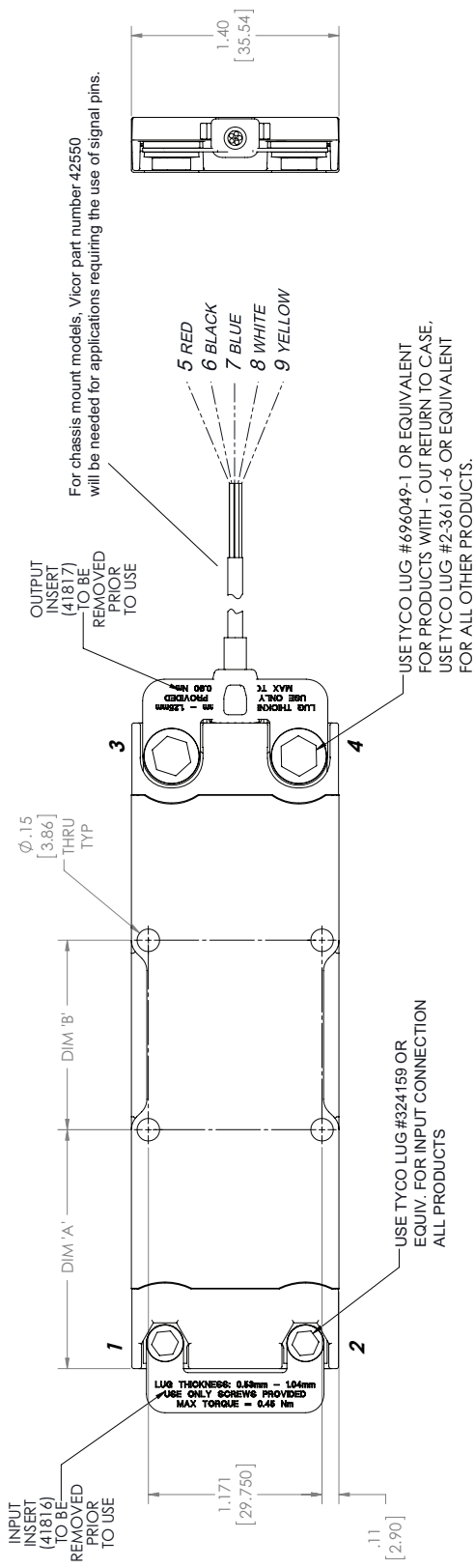

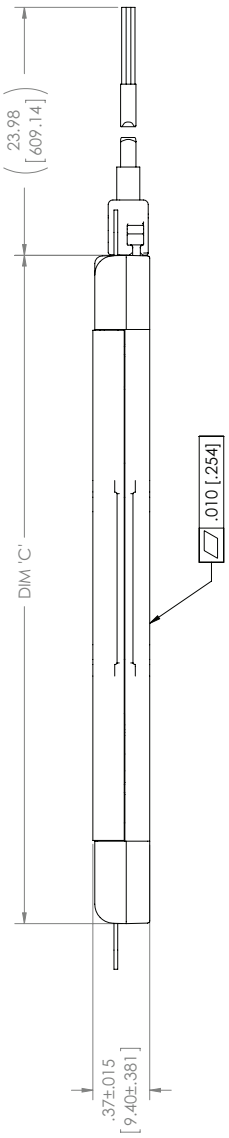

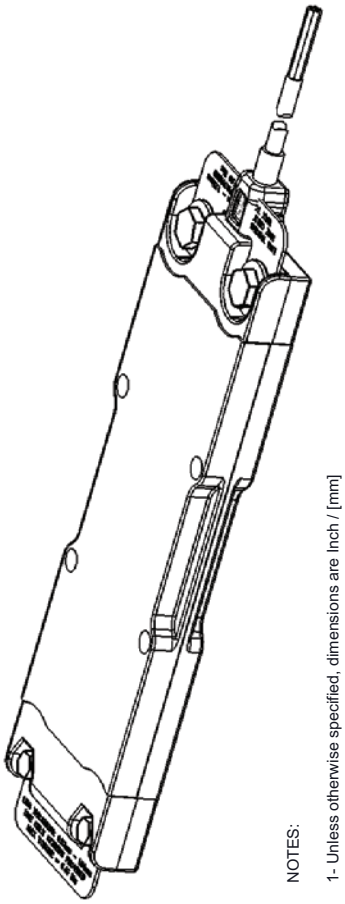

NOTES:

1- Unless otherwise specified, dimensions are Inch / [mm]

2- See Pin Configuration and Pin Description sections for pin designations

PRODUCT	DIM 'A'	DIM 'B'	DIM 'C'
3414 DCM	1.61 [40.93]	.788 [20.005]	3.38 [85.93]
3714 DCM	1.61 [40.93]	1.150 [29.200]	3.75 [95.13]
3814 NBM –OUT RETURN TO CASE	1.02 [25.96]	1.277 [32.430]	3.76 [95.59]
3814 BCM –OUT RETURN TO CASE	1.02 [25.96]	1.277 [32.430]	3.76 [95.59]
4414 BCM	1.61 [40.93]	1.757 [44.625]	4.35 [110.55]
4414 BCM –OUT RETURN TO CASE	1.61 [40.93]	1.277 [32.430]	4.35 [110.55]
4414 UHV BCM	1.61 [40.93]	1.718 [43.625]	4.35 [110.55]
4414 PFM	1.61 [40.93]	1.757 [44.625]	4.35 [110.55]
4414 PFM 3kV	1.61 [40.93]	1.658 [42.110]	4.35 [110.55]
4914 PFM	2.17 [55.12]	1.757 [44.625]	4.91 [124.75]

BCM in VIA Package PCB (Board) Mount Package Mechanical Drawing

PRODUCT	DIM 'A'	DIM 'B'	DIM 'C'	DIM 'D'	DIM 'E'	DIM 'F'	DIM 'G'
3414 DCM	1.61 [40.93]	.788 [20.005]	3.38 [85.93]	2.988 [75.897]	3.47 [88.14]	1.439 [36.554]	3.251 [82.586]
3714 DCM	1.61 [40.93]	1.150 [29.200]	3.75 [95.13]	3.350 [85.092]	3.83 [97.34]	1.439 [36.554]	3.613 [91.781]
4414 BCM	1.61 [40.93]	1.757 [44.625]	4.35 [110.55]	3.957 [100.517]	4.44 [112.76]	1.439 [36.554]	4.221 [107.206]
4414 UHV BCM	1.65 [41.93]	1.718 [43.625]	4.35 [110.55]	3.957 [100.517]	4.44 [112.76]	1.479 [37.554]	4.221 [107.206]
4414 PFM	1.61 [40.93]	1.757 [44.625]	4.35 [110.55]	3.957 [100.517]	4.44 [112.76]	1.439 [36.554]	4.221 [107.206]
4414 PFM 3kV	1.61 [40.93]	1.658 [42.110]	4.35 [110.55]	3.957 [100.517]	4.44 [112.76]	1.439 [36.554]	4.221 [107.206]
4914 PFM	2.17 [55.12]	1.757 [44.625]	4.91 [124.75]	4.517 [114.741]	5.00 [126.96]	1.999 [50.777]	4.780 [121.430]

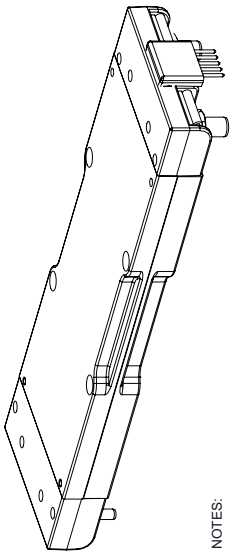

NOTES:

1- Unless otherwise specified, dimensions are Inch / [mm]

2- See Pin Configuration and Pin Description sections for pin designations

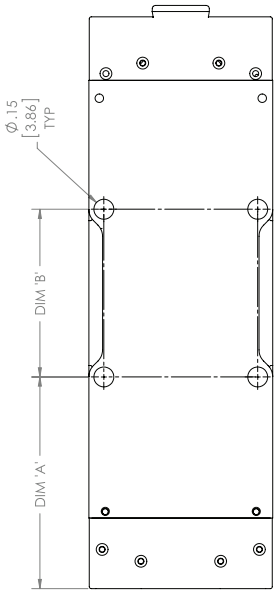

TOP VIEW
(COMPONENT SIDE)

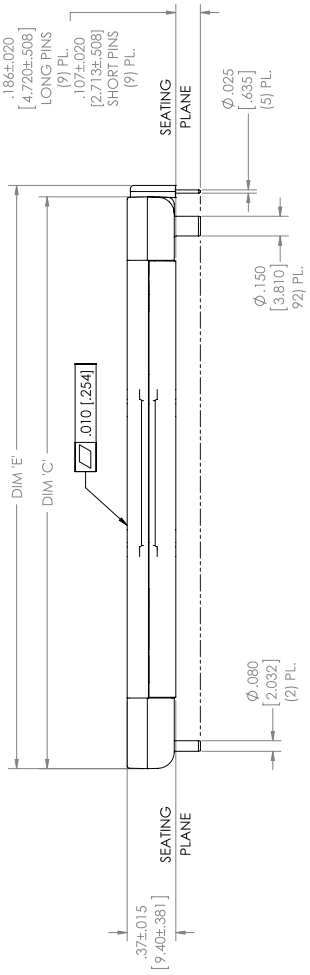

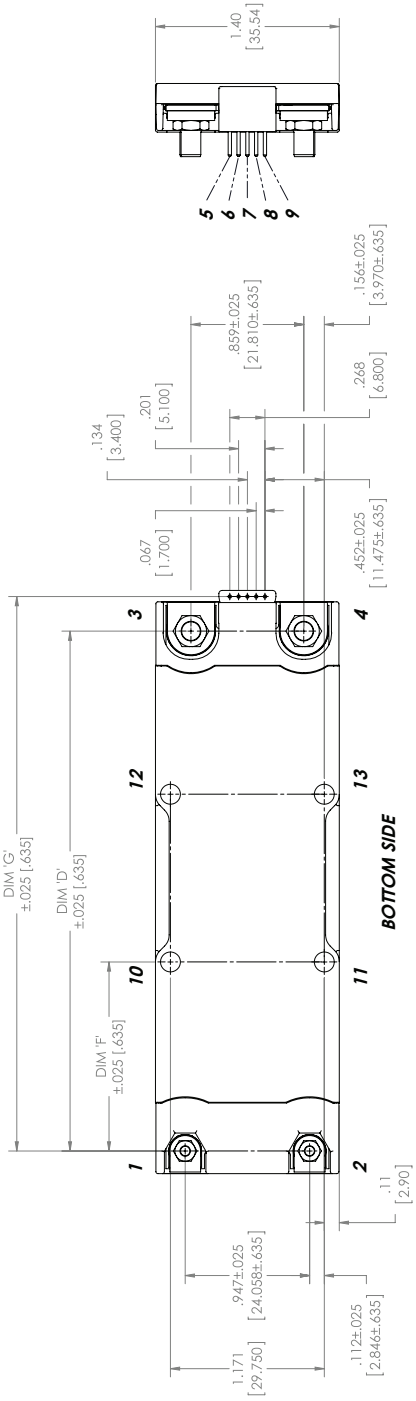

BCM in VIA Package PCB (Board) Mount Package Recommended Hole Pattern

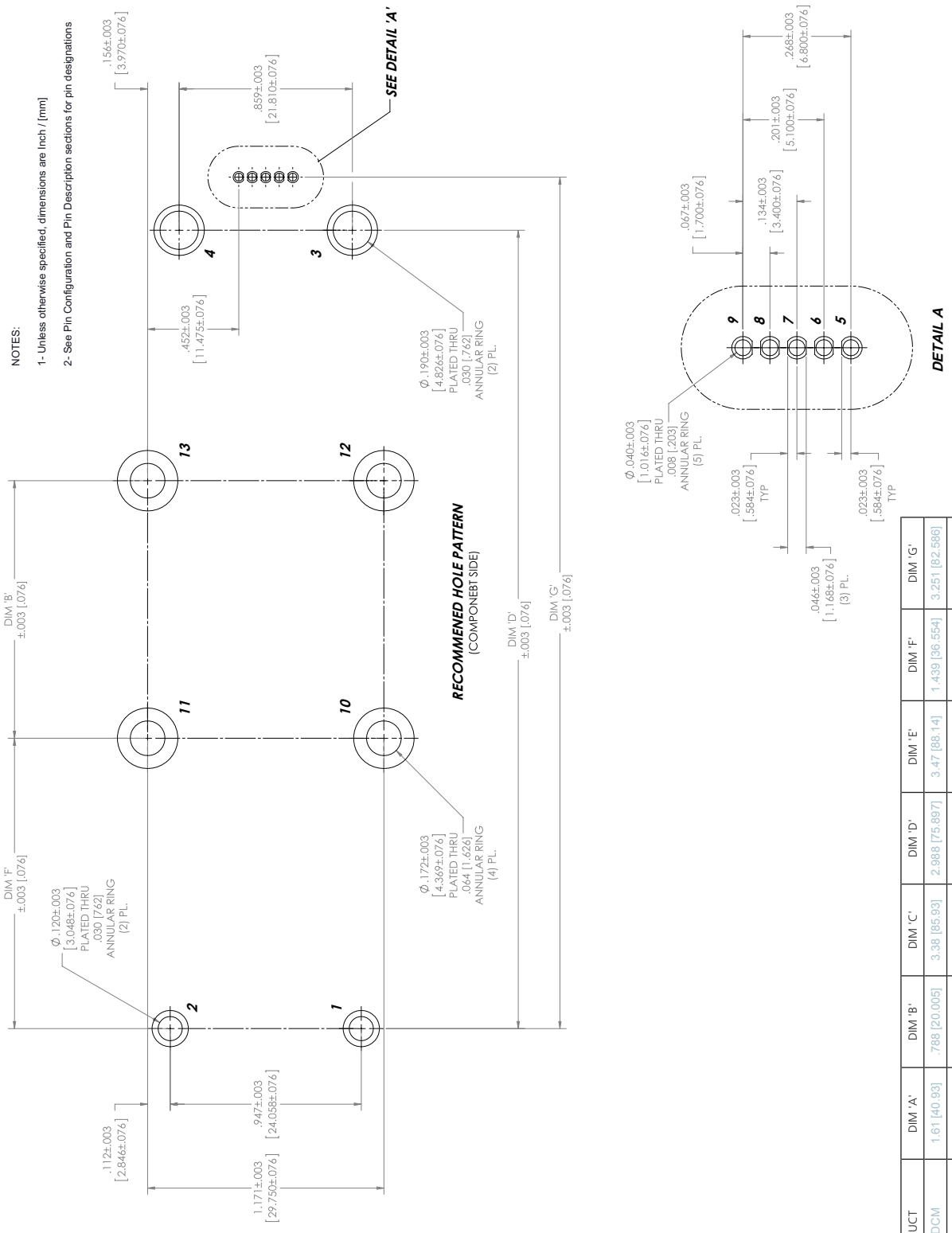

PRODUCT	DIM 'A'	DIM 'B'	DIM 'C'	DIM 'D'	DIM 'E'	DIM 'F'	DIM 'G'
3414 DCM	1.61 [40.93]	788 [20.005]	3.38 [85.93]	2.988 [75.897]	3.47 [88.14]	1.439 [36.554]	3.251 [82.586]
3714 DCM	1.61 [40.93]	1.150 [29.200]	3.75 [95.13]	3.350 [85.092]	3.83 [97.34]	1.439 [36.554]	3.613 [91.781]
4414 BCM	1.61 [40.93]	1.757 [44.625]	4.35 [110.55]	3.957 [100.517]	4.44 [112.76]	1.439 [36.554]	4.221 [107.206]
4414 UHV BCM	1.65 [41.93]	1.718 [43.625]	4.35 [110.55]	3.957 [100.517]	4.44 [112.76]	1.479 [37.554]	4.221 [107.206]
4414 PFM	1.61 [40.93]	1.757 [44.625]	4.35 [110.55]	3.957 [100.517]	4.44 [112.76]	1.439 [36.554]	4.221 [107.206]
4414 PFM 3kV	1.61 [40.93]	1.658 [42.110]	4.35 [110.55]	3.957 [100.517]	4.44 [112.76]	1.439 [36.554]	4.221 [107.206]
4914 PFM	2.17 [55.12]	1.757 [44.625]	4.91 [124.75]	4.517 [114.741]	5.00 [126.96]	1.999 [50.777]	4.780 [121.430]

4414 UHV VIA BCM TIM PAD Mechanical Drawing

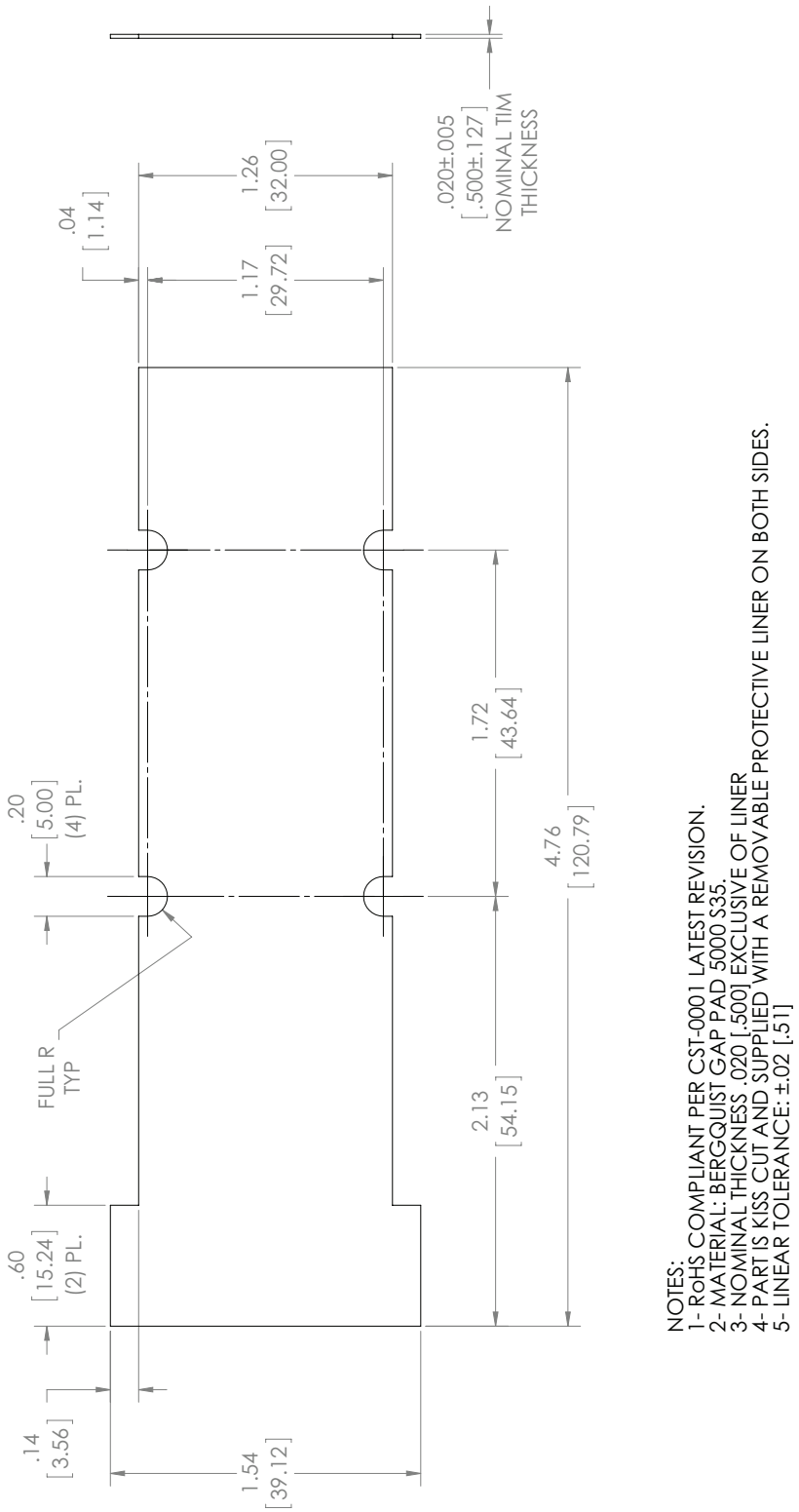

In chassis-mount applications or in board-mount applications with heat sink, an insulation layer of Gap Pad TIM (for example, Henkel Bergquist Gap Pad 5000S35 thickness 20 thousands, or similar) is necessary to meet the creepage requirements from the high-voltage terminals to the case. Vicor part number 45766 is the TIM Pad recommended for use with Vicor UHV BCM4414 VIA.

Revision History

Revision	Date	Description	Page Number(s)
1.0	04/18/19	Initial release	n/a
1.1	08/06/20	Updated terminology	25, 27, 28, 29, 32
1.2	10/26/20	Updated to include reverse-direction operation options and specifications	5, 9, 23, 24

Note: page added in Rev 1.7.

Vicor's comprehensive line of power solutions includes high density AC-DC and DC-DC modules and accessory components, fully configurable AC-DC and DC-DC power supplies, and complete custom power systems.

Information furnished by Vicor is believed to be accurate and reliable. However, no responsibility is assumed by Vicor for its use. Vicor makes no representations or warranties with respect to the accuracy or completeness of the contents of this publication. Vicor reserves the right to make changes to any products, specifications, and product descriptions at any time without notice. Information published by Vicor has been checked and is believed to be accurate at the time it was printed; however, Vicor assumes no responsibility for inaccuracies. Testing and other quality controls are used to the extent Vicor deems necessary to support Vicor's product warranty. Except where mandated by government requirements, testing of all parameters of each product is not necessarily performed.

Specifications are subject to change without notice.

Visit http://www.vicorpower.com/dc-dc/isolated-fixed-ratio/hv-bus-converter-module for the latest product information.

Vicor's Standard Terms and Conditions and Product Warranty

All sales are subject to Vicor's Standard Terms and Conditions of Sale, and Product Warranty which are available on Vicor's webpage (http://www.vicorpower.com/termsconditionswarranty) or upon request.

Life Support Policy

VICOR'S PRODUCTS ARE NOT AUTHORIZED FOR USE AS CRITICAL COMPONENTS IN LIFE SUPPORT DEVICES OR SYSTEMS WITHOUT THE EXPRESS PRIOR WRITTEN APPROVAL OF THE CHIEF EXECUTIVE OFFICER AND GENERAL COUNSEL OF VICOR CORPORATION. As used herein, life support devices or systems are devices which (a) are intended for surgical implant into the body, or (b) support or sustain life and whose failure to perform when properly used in accordance with instructions for use provided in the labeling can be reasonably expected to result in a significant injury to the user. A critical component is any component in a life support device or system whose failure to perform can be reasonably expected to cause the failure of the life support device or system or to affect its safety or effectiveness. Per Vicor Terms and Conditions of Sale, the user of Vicor products and components in life support applications assumes all risks of such use and indemnifies Vicor against all liability and damages.

Intellectual Property Notice

Vicor and its subsidiaries own Intellectual Property (including issued U.S. and Foreign Patents and pending patent applications) relating to the products described in this data sheet. No license, whether express, implied, or arising by estoppel or otherwise, to any intellectual property rights is granted by this document. Interested parties should contact Vicor's Intellectual Property Department.

The products described on this data sheet are protected by the following U.S. Patents Numbers:
7,145,786; 6,930,893; 10,398,040 and other patents pending.

Contact Us: http://www.vicorpower.com/contact-us

Vicor Corporation
25 Frontage Road
Andover, MA, USA 01810
Tel: 800-735-6200
Fax: 978-475-6715
www.vicorpower.com

email
Customer Service: custserv@vicorpower.com
Technical Support: apps@vicorpower.com

©2019 – 2020 Vicor Corporation. All rights reserved. The Vicor name is a registered trademark of Vicor Corporation.
PMBus® is a registered trademark of SMIF, Inc.
I²C™ is a trademark of NXP Semiconductor
All other trademarks, product names, logos and brands are property of their respective owners.