BCM® in a VIA™ Package Bus Converter

BCM4414xH0E5035yzz

Isolated Fixed-Ratio DC-DC Converter

Features & Benefits

- Up to 35A continuous low-voltage-side current
- Fixed transformation ratio (K) of 1/16
- Up to 776W/in^3 power density
- 97.7% peak efficiency
- Integrated filtering
- Parallel operation for multi-kW arrays
- OV, OC, UV, short circuit and thermal protection
- 4414 package
- High MTBF
- Thermally enhanced VIA package
- PMBus® management interface

Typical Applications

- High-Voltage DC Power Distribution
- 3-Phase AC-DC Converters
- Information and Communication Technology (ICT) Equipment
- High-End Computing Systems
- Automated Test Equipment
- Industrial Systems
- High-Density Energy Systems
- Transportation
- Green Buildings and Microgrids

Product Ratings	
V_{HI} = 650V (500 – 800V)	I_{LO} = up to 35A
V_{LO} = 40.6V (31.3 – 50.0V) (NO LOAD)	K = 1/16

Product Description

The BCM4414xH0E5035yzz in a VIA package is a high-efficiency Bus Converter, operating from a 500 to 800V_{DC} high-voltage bus to deliver an isolated 31.3 to 50.0V_{DC} unregulated, low voltage.

This unique ultra-low-profile module incorporates DC-DC conversion, integrated filtering and PMBus commands and controls in a chassis or PCB mount form factor.

The BCM offers low noise, fast transient response and industry-leading efficiency and power density. A low-voltage-side referenced PMBus-compatible telemetry and control interface provides access to the BCM's configuration, fault monitoring and other telemetry functions.

Leveraging the thermal and density benefits of Vicor VIA packaging technology, the BCM module offers flexible thermal management options with very low top- and bottom-side thermal impedances.

When combined with downstream Vicor DC-DC conversion components and regulators, the BCM allows the Power Design Engineer to employ a simple, low-profile design, which will differentiate the end system without compromising on cost or performance metrics.

Size:
4.35 x 1.40 x 0.37in
[110.55 x 35.54 x 9.40mm]

READ_VIN Command (88h)

If PAGE data byte is equal to (01h), command will return the BCM's HI-side voltage in the following format:

$$V_{HI\_ACTUAL} = V_{HI\_REPORTED} \bullet 10^{-1}(V)$$

READ_IIN Command (89h)

If PAGE data byte is equal to (01h), command will return the BCM's

$$I_{HI\_ACTUAL} = I_{HI\_REPORTED} \bullet 10^{-3}(A)$$

HI-side current in the following format:

If PAGE data byte is equal (00h), command will also return the BCM's HI-side current.

READ_VOUT Command (8Bh)

$$V_{LO\_ACTUAL} = V_{LO\_REPORTED} \bullet 10^{-1}(V)$$

If PAGE data byte is equal to (01h), command will return the BCM's LO-side voltage in the following format:

READ_IOUT Command (8Ch)

$$I_{LO\_ACTUAL} = I_{LO\_REPORTED} \bullet 10^{-2}(A)$$

If PAGE data byte is equal to (01h), command will return the BCM's LO-side current in the following format:

If PAGE data byte is equal (00h), command will also return the BCM's LO-side current.

READ_TEMPERATURE_1 Command (8Dh)

$$T_{ACTUAL} = \pm T_{REPORTED}\ (°C)$$

If PAGE data byte is equal to (01h), command will return the BCM's temperature in the following format:

If PAGE data byte is equal (00h), command will also return the BCM's temperature

READ_POUT Command (96h)

If PAGE data byte is equal to (01h), command will return the BCM's LO-side power in the following format:

$$P_{LO\_ACTUAL} = P_{LO\_REPORTED}\ (W)$$

If PAGE data byte is equal to (00h), command will also return the BCM's LO-side power.

MFR_VIN_MIN Command (A0h), MFR_VIN_MAX Command (A1h), MFR_VOUT_MIN Command (A4h), MFR_VOUT_MAX Command (A5h), MFR_IOUT_MAX Command (A6h), MFR_POUT_MAX Command (A7h)

These values are set by the factory and indicate the device HI-side/LO-side voltage and LO-side current range and LO-side power capacity.

If the PAGE data byte is equal to (00h – 01h),commands report the rated BCM HI-side voltage minimum and maximum in Volts, LO-side voltage minimum and maximum in Volts, LO-side current maximum in Amperes and LO-side power maximum in Watts.

READ_K_FACTOR Command (D1h)

If PAGE data byte is equal to (01h), command will return the BCM's K factor in the following format:

$$K\_FACTOR_{ACTUAL} = K\_FACTOR_{REPORTED} \bullet 2^{-16}(V/V)$$

The K factor is defined in the BCM to represent the ratio of the transformer winding and hence is equal to V_{LO} / V_{HI}.

READ_BCM_ROUT Command (D4h)

If PAGE data byte is equal to (01h), command will return the BCM's LO-side resistance in the following format:

$$BCM\_R_{LO\_ACTUAL} = BCM\_R_{LO\_REPORTED} \bullet 10^{-5}(\Omega)$$

SET_ALL_THRESHOLDS Command (D5h)

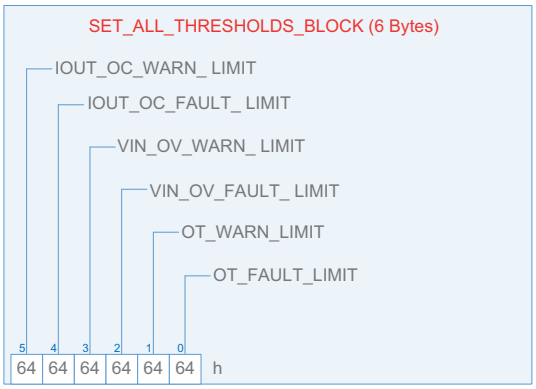

The values of this register block are set in non-volatile memory and can only be written when the BCM is disabled.

This command provides a convenient way to configure all of the limits, or any combination of limits described previously using one command.

V_{HI} overvoltage, overcurrent and overtemperature values are all set to 100% of the specified supervisory limits by default and can only be set to a lower percentage.

To leave a particular threshold unchanged, set the corresponding threshold data byte to a value greater than (64h).

DISABLE_FAULT Command (D7h)

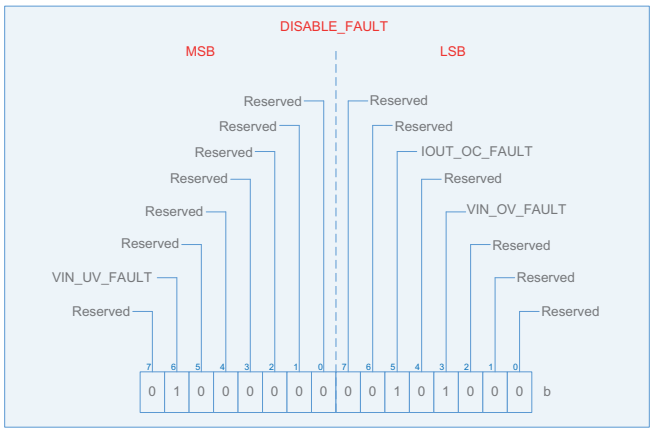

Unsupported bits are indicated above. A one indicates that the supervisory fault associated with the asserted bit is disabled.

The values of this register block are set in non-volatile memory and can only be written when the BCM is disabled.

This command allows the host to disable the supervisory faults and respective statuses. It does not disable the powertrain analog protections or warnings with respect to the set limits in the SET_ALL_THRESHOLDS Command.

The HI-side undervoltage can only be disabled to a pre-set low limit as specified in the Monitored Telemetry Functional Reporting Range.

The BCM Controller Implementation vs. PMBus® Specification Rev 1.2

The BCM controller is an I²C™ compliant, SMBus compatible device and PMBus command compliant device. This section denotes some deviation, perceived as differences from the PMBus Part I and Part II specification Rev 1.2.

1. The PMBus interface meets all Part I and II PMBus specification requirements with the following differences to the transport requirement.

Unmet DC parameter Implementation vs SMBus spec						
Symbol	Parameter	PMBus Interface		SMBus Rev 2.0		Units
		Min	Max	Min	Max	
V_{IL} [a]	Input Low Voltage	–	0.99	–	0.8	V
V_{IH} [a]	Input High Voltage	2.31	–	2.1	V_{VDD_IN}	V
I_{LEAK_PIN} [b]	Input Leakage per Pin	10	22	–	±5	µA

[a] V_{VDD_IN} = 3.3V
[b] V_{BUS} = 5V

2. The BCM accepts 38 PMBus command codes. Implemented commands execute functions as described in the PMBus specification.

- Deviations from the PMBus specification:

  a. Section 15, fault related commands

  - The limits and Warnings unit is implemented as a percentage (%) a range from decimal (0 – 100) of the factory set limits.

3. The unsupported PMBus command code response as described in the Fault Management and Reporting:

- Deviations from the PMBus specification:

  a. PMBus section 10.2.5.3, exceptions

  - The busy bit of the STATUS_BYTE as implemented can be cleared (80h). In order to maintain compatibility with the specification, (40h) can also be used.

- Manufacturer Implementation of the PMBus Spec:

  a. PMBus section 10.5, setting the response to a detected fault condition

  - All powertrain responses are pre-set and cannot be changed.

  b. PMBus section 10.6, reporting faults and warnings to the Host

  - SMBALERT# signal and Direct PMBus Device to Host Communication are not supported. However, the PMBus interface will set the corresponding fault status bits and will wait for the host to poll.

  c. PMBus section 10.7, clearing a shut down due to a fault

  - There is no RESET pin or EN pin in the BCM. Cycling power to the BCM will not clear a BCM Shut Down. The BCM will clear itself once the fault condition is removed.

  d. PMBus Section 10.8.1, corrupted data transmission faults:

  - Packet error checking is not supported.

Data Transmission Faults Implementation

This section describes data transmission faults as implemented in the BCM controller.

Section	Description	Response to Host		STATUS_BYTE	STATUS_CML		Notes
		NAK	FFh	CML	Other Fault	Unsupported Data	
10.8.1	Corrupted data						No response; PEC not supported
10.8.2	Sending too few bits			X	X		
10.8.3	Reading too few bits			X	X		
10.8.4	Host sends or reads too few bytes			X	X		
10.8.5	Host sends too many bytes	X		X		X	
10.8.6	Reading too many bytes		X	X	X		
10.8.7	Device busy	X	X				Device will ACK own address BUSY bit in STATUS_BYTE even if STATUS_WORD is set

Data Content Faults Implementation

This section describes data content fault as implemented in the BCM controller.

Section	Description	Response to Host	STATUS_BYTE	STATUS_CML			Notes
		NAK	CML	Other Fault	Unsupported Command	Unsupported Data	
10.9.1	Improperly set read bit in the address byte	X	X	X			
10.9.2	Unsupported command code	X	X		X		
10.9.3	Invalid or unsupported data		X			X	
10.9.4	Data out of range		X			X	
10.9.5	Reserved bits						No response; not a fault

BCM in VIA Package Chassis (Lug) Mount Package Mechanical Drawing

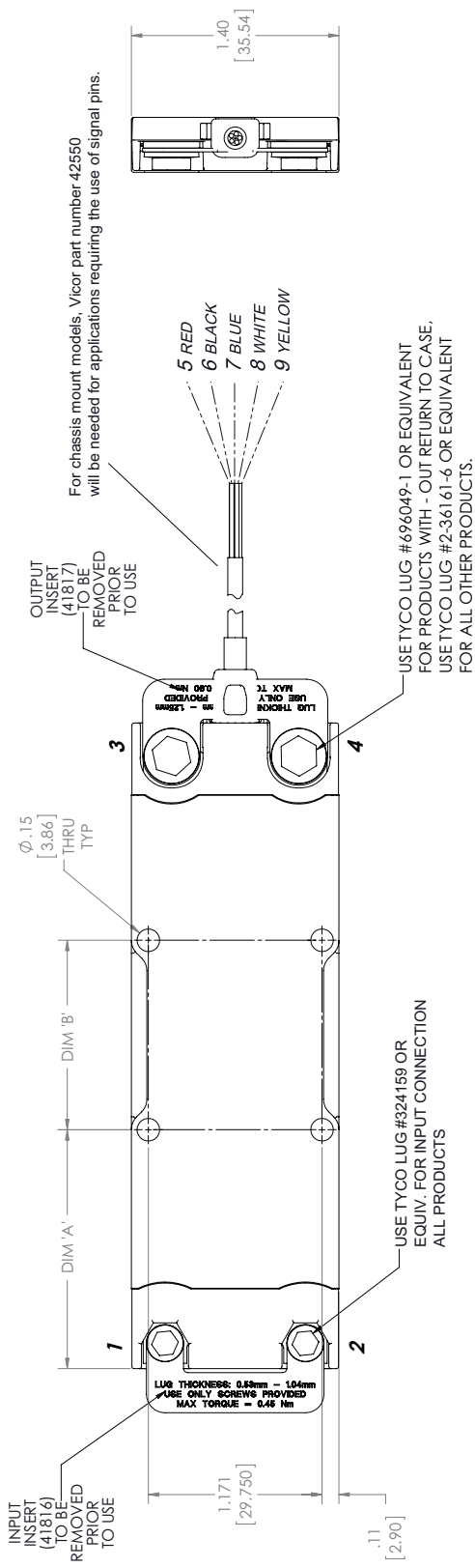

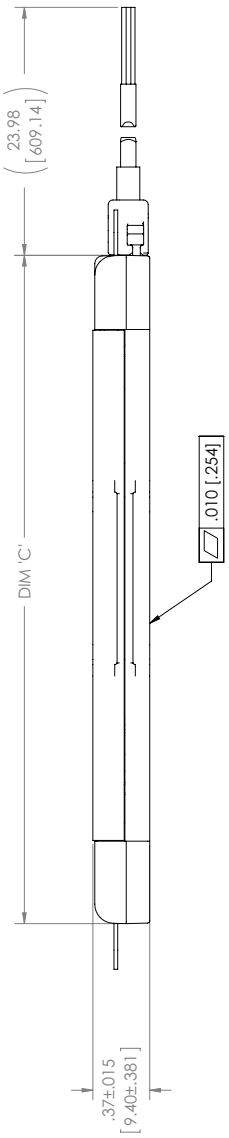

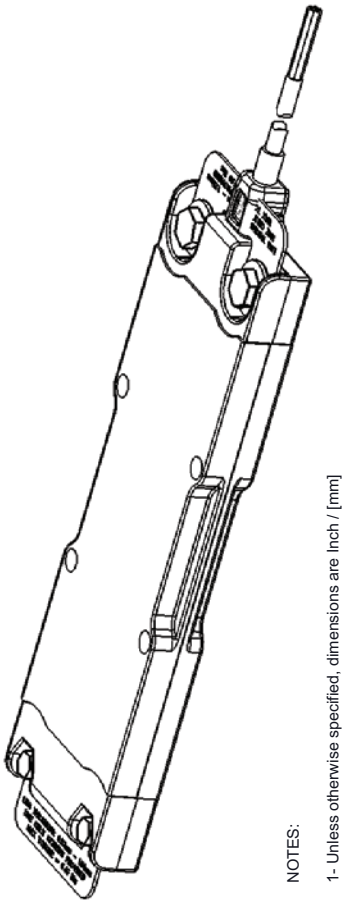

NOTES:

1- Unless otherwise specified, dimensions are Inch / [mm]

2- See Pin Configuration and Pin Description sections for pin designations

PRODUCT	DIM 'A'	DIM 'B'	DIM 'C'
3414 DCM	1.61 [40.93]	.788 [20.005]	3.38 [85.93]
3714 DCM	1.61 [40.93]	1.150 [29.200]	3.75 [95.13]
3814 NBM –OUT RETURN TO CASE	1.02 [25.96]	1.277 [32.430]	3.76 [95.59]
3814 BCM –OUT RETURN TO CASE	1.02 [25.96]	1.277 [32.430]	3.76 [95.59]
4414 BCM	1.61 [40.93]	1.757 [44.625]	4.35 [110.55]
4414 BCM –OUT RETURN TO CASE	1.61 [40.93]	1.277 [32.430]	4.35 [110.55]
4414 UHV BCM	1.61 [40.93]	1.718 [43.625]	4.35 [110.55]
4414 PFM	1.61 [40.93]	1.757 [44.625]	4.35 [110.55]
4414 PFM 3kV	1.61 [40.93]	1.658 [42.110]	4.35 [110.55]
4914 PFM	2.17 [55.12]	1.757 [44.625]	4.91 [124.75]

BCM in VIA Package PCB (Board) Mount Package Mechanical Drawing

PRODUCT	DIM 'A'	DIM 'B'	DIM 'C'	DIM 'D'	DIM 'E'	DIM 'F'	DIM 'G'
3414 DCM	1.61 [40.93]	.788 [20.005]	3.38 [85.93]	2.988 [75.897]	3.47 [88.14]	1.439 [36.554]	3.251 [82.586]
3714 DCM	1.61 [40.93]	1.150 [29.200]	3.75 [95.13]	3.350 [85.092]	3.83 [97.34]	1.439 [36.554]	3.613 [91.781]
4414 BCM	1.61 [40.93]	1.757 [44.625]	4.35 [110.55]	3.957 [100.517]	4.44 [112.76]	1.439 [36.554]	4.221 [107.206]
4414 UHV BCM	1.65 [41.93]	1.718 [43.625]	4.35 [110.55]	3.957 [100.517]	4.44 [112.76]	1.479 [37.554]	4.221 [107.206]
4414 PFM	1.61 [40.93]	1.757 [44.625]	4.35 [110.55]	3.957 [100.517]	4.44 [112.76]	1.439 [36.554]	4.221 [107.206]
4414 PFM 3kV	1.61 [40.93]	1.658 [42.110]	4.35 [110.55]	3.957 [100.517]	4.44 [112.76]	1.439 [36.554]	4.221 [107.206]
4914 PFM	2.17 [55.12]	1.757 [44.625]	4.91 [124.75]	4.517 [114.741]	5.00 [126.96]	1.999 [50.777]	4.780 [121.430]

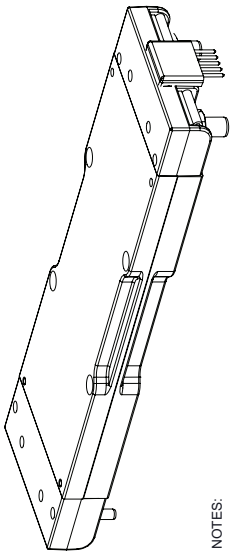

NOTES:

1- Unless otherwise specified, dimensions are Inch / [mm]

2- See Pin Configuration and Pin Description sections for pin designations

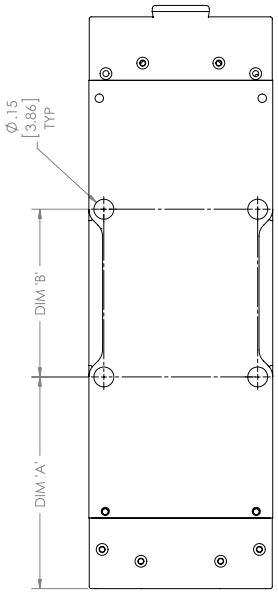

TOP VIEW
(COMPONENT SIDE)

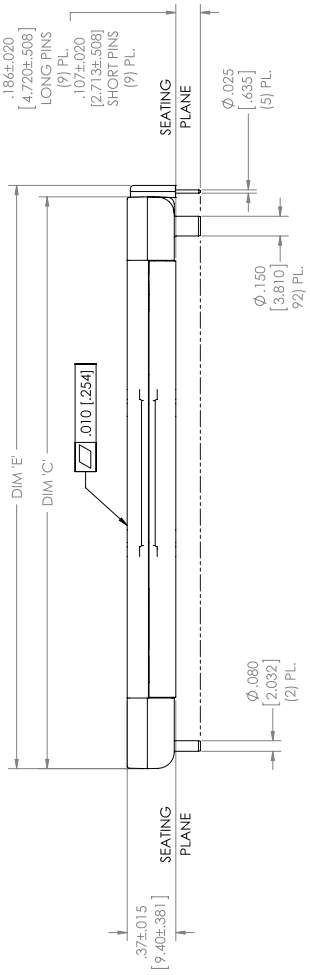

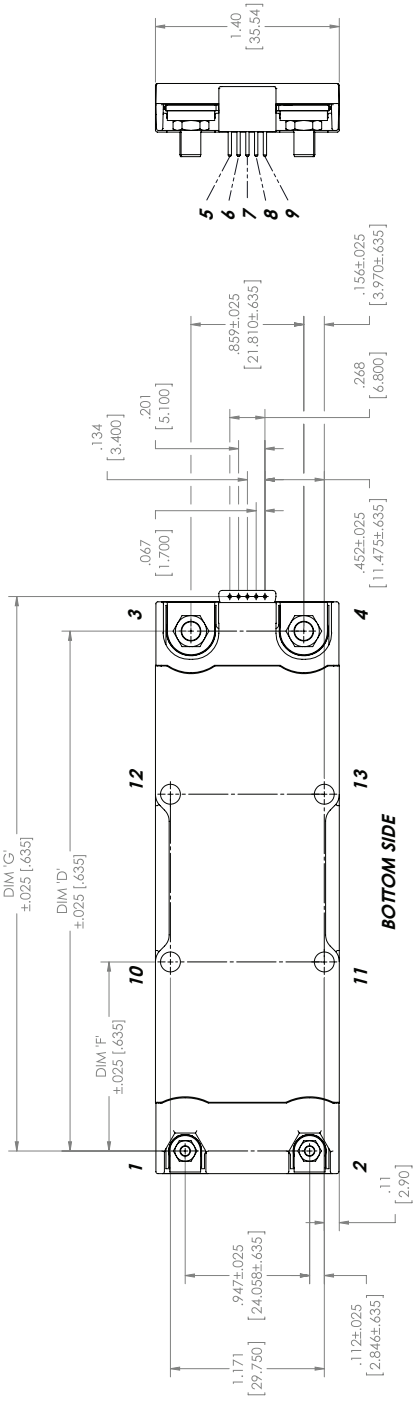

BCM in VIA Package PCB (Board) Mount Package Recommended Hole Pattern

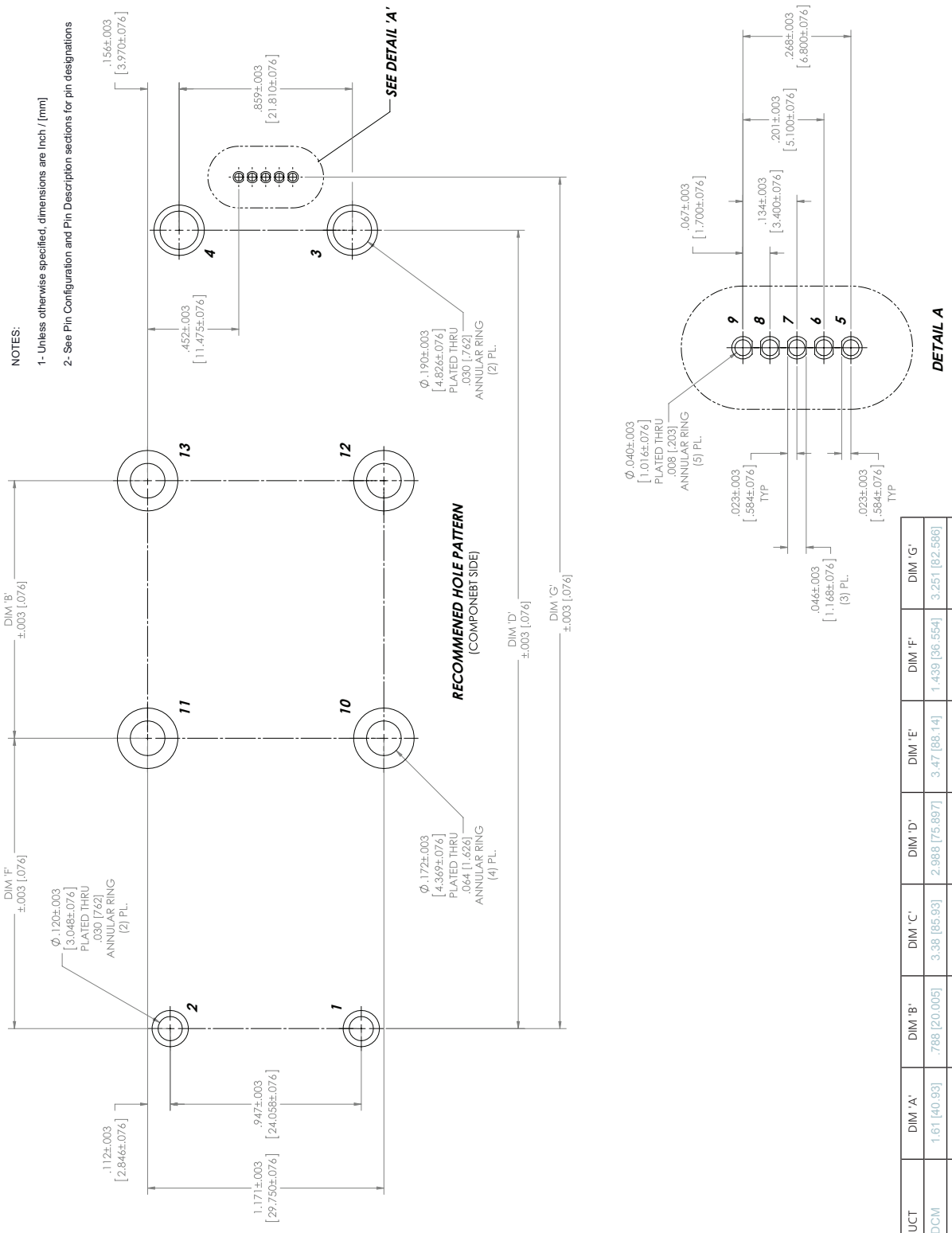

PRODUCT	DIM 'A'	DIM 'B'	DIM 'C'	DIM 'D'	DIM 'E'	DIM 'F'	DIM 'G'
3414 DCM	1.61 [40.93]	788 [20.005]	3.38 [85.93]	2.988 [75.897]	3.47 [88.14]	1.439 [36.554]	3.251 [82.586]
3714 DCM	1.61 [40.93]	1.150 [29.200]	3.75 [95.13]	3.350 [85.092]	3.83 [97.34]	1.439 [36.554]	3.613 [91.781]
4414 BCM	1.61 [40.93]	1.757 [44.625]	4.35 [110.55]	3.957 [100.517]	4.44 [112.76]	1.439 [36.554]	4.221 [107.206]
4414 UHV BCM	1.65 [41.93]	1.718 [43.625]	4.35 [110.55]	3.957 [100.517]	4.44 [112.76]	1.479 [37.554]	4.221 [107.206]
4414 PFM	1.61 [40.93]	1.757 [44.625]	4.35 [110.55]	3.957 [100.517]	4.44 [112.76]	1.439 [36.554]	4.221 [107.206]
4414 PFM 3kV	1.61 [40.93]	1.658 [42.110]	4.35 [110.55]	3.957 [100.517]	4.44 [112.76]	1.439 [36.554]	4.221 [107.206]
4914 PFM	2.17 [55.12]	1.757 [44.625]	4.91 [124.75]	4.517 [114.741]	5.00 [126.96]	1.999 [50.777]	4.780 [121.430]

4414 UHV VIA BCM TIM PAD Mechanical Drawing

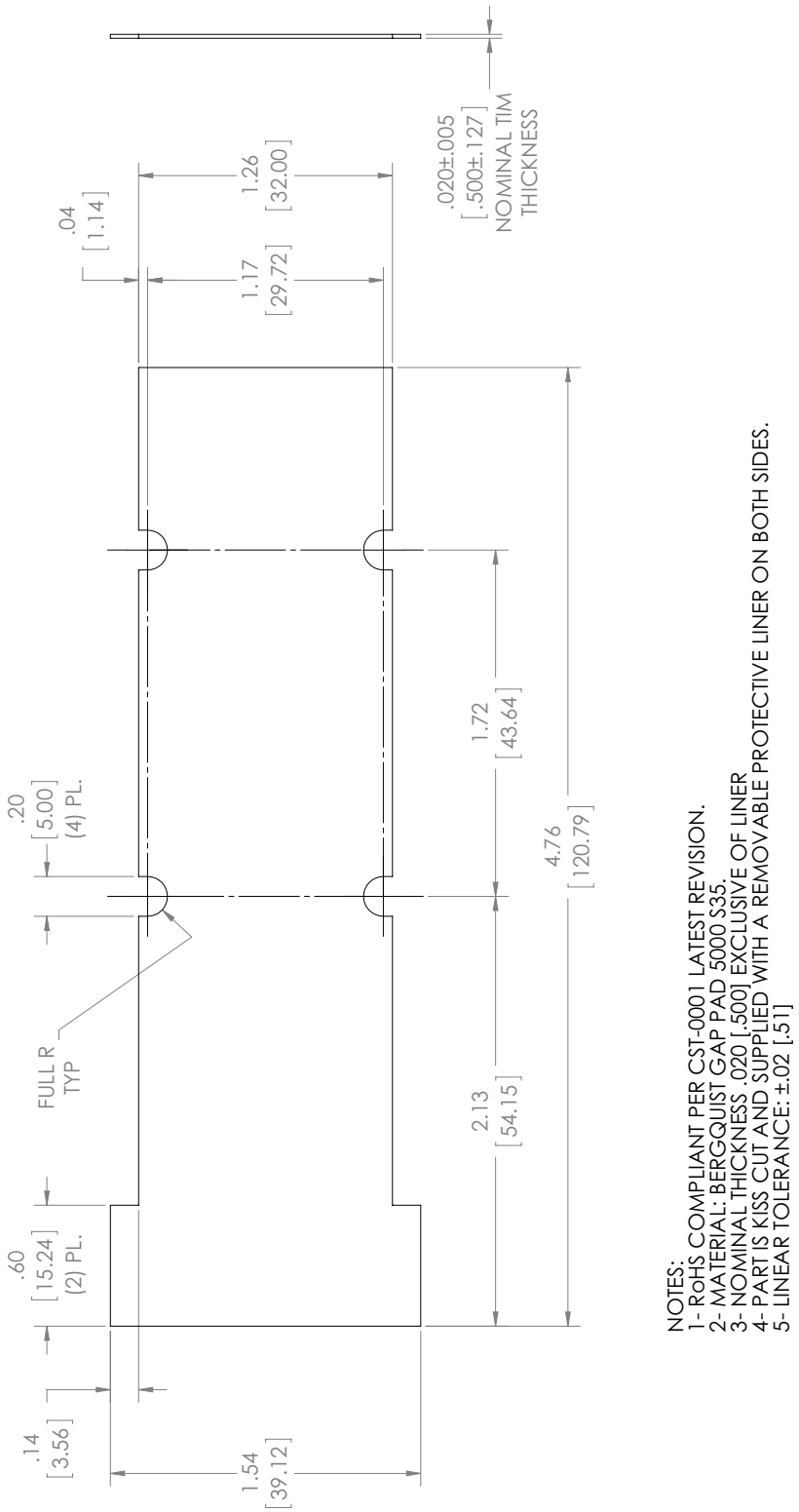

In chassis-mount applications or in board-mount applications with heat sink, an insulation layer of Gap Pad TIM (for example, Henkel Bergquist Gap Pad 5000S35 thickness 20 thousands, or similar) is necessary to meet the creepage requirements from the high-voltage terminals to the case. Vicor part number 45766 is the TIM Pad recommended for use with Vicor UHV BCM4414 VIA.

Revision History

Revision	Date	Description	Page Number(s)
1.0	04/18/19	Initial release	n/a
1.1	08/06/20	Updated terminology	25, 27, 28, 29, 32
1.2	10/26/20	Updated to include reverse-direction operation options and specifications	5, 9, 23, 24

Note: page added in Rev 1.7.

Vicor's comprehensive line of power solutions includes high density AC-DC and DC-DC modules and accessory components, fully configurable AC-DC and DC-DC power supplies, and complete custom power systems.

Information furnished by Vicor is believed to be accurate and reliable. However, no responsibility is assumed by Vicor for its use. Vicor makes no representations or warranties with respect to the accuracy or completeness of the contents of this publication. Vicor reserves the right to make changes to any products, specifications, and product descriptions at any time without notice. Information published by Vicor has been checked and is believed to be accurate at the time it was printed; however, Vicor assumes no responsibility for inaccuracies. Testing and other quality controls are used to the extent Vicor deems necessary to support Vicor's product warranty. Except where mandated by government requirements, testing of all parameters of each product is not necessarily performed.

Specifications are subject to change without notice.

Visit http://www.vicorpower.com/dc-dc/isolated-fixed-ratio/hv-bus-converter-module for the latest product information.

Vicor's Standard Terms and Conditions and Product Warranty

All sales are subject to Vicor's Standard Terms and Conditions of Sale, and Product Warranty which are available on Vicor's webpage (http://www.vicorpower.com/termsconditionswarranty) or upon request.

Life Support Policy

VICOR'S PRODUCTS ARE NOT AUTHORIZED FOR USE AS CRITICAL COMPONENTS IN LIFE SUPPORT DEVICES OR SYSTEMS WITHOUT THE EXPRESS PRIOR WRITTEN APPROVAL OF THE CHIEF EXECUTIVE OFFICER AND GENERAL COUNSEL OF VICOR CORPORATION. As used herein, life support devices or systems are devices which (a) are intended for surgical implant into the body, or (b) support or sustain life and whose failure to perform when properly used in accordance with instructions for use provided in the labeling can be reasonably expected to result in a significant injury to the user. A critical component is any component in a life support device or system whose failure to perform can be reasonably expected to cause the failure of the life support device or system or to affect its safety or effectiveness. Per Vicor Terms and Conditions of Sale, the user of Vicor products and components in life support applications assumes all risks of such use and indemnifies Vicor against all liability and damages.

Intellectual Property Notice

Vicor and its subsidiaries own Intellectual Property (including issued U.S. and Foreign Patents and pending patent applications) relating to the products described in this data sheet. No license, whether express, implied, or arising by estoppel or otherwise, to any intellectual property rights is granted by this document. Interested parties should contact Vicor's Intellectual Property Department.

The products described on this data sheet are protected by the following U.S. Patents Numbers:
7,145,786; 6,930,893; 10,398,040 and other patents pending.

Contact Us: http://www.vicorpower.com/contact-us

Vicor Corporation
25 Frontage Road
Andover, MA, USA 01810
Tel: 800-735-6200
Fax: 978-475-6715
www.vicorpower.com

email
Customer Service: custserv@vicorpower.com
Technical Support: apps@vicorpower.com

©2019 – 2020 Vicor Corporation. All rights reserved. The Vicor name is a registered trademark of Vicor Corporation.
PMBus® is a registered trademark of SMIF, Inc.
I²C™ is a trademark of NXP Semiconductor
All other trademarks, product names, logos and brands are property of their respective owners.